Data Sheet

Article number: 2029350200LL2SCR
Description: E+G Linear actuators - GN 293-50-200-LL2-SCR

Measures

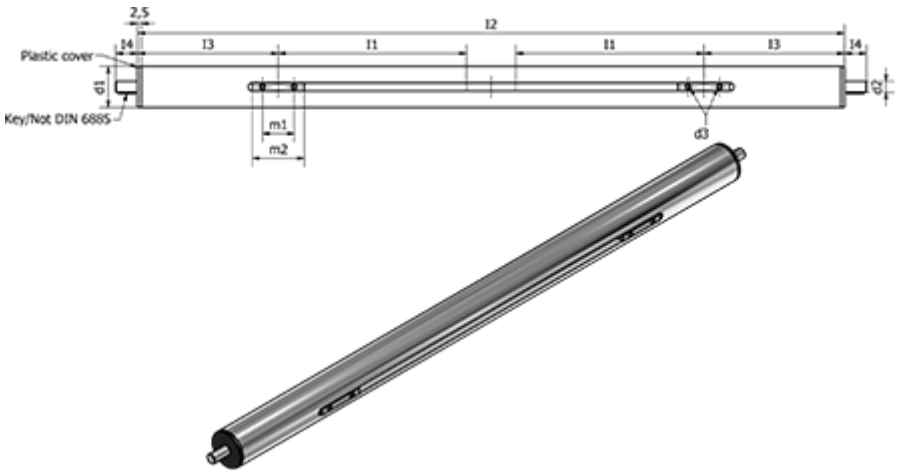

d1	= 50	m2	= 54
d2 f7	= 12	Max. travel	= 748
d3	= M6	Shaft key DIN 6885	= A4x4x12
l1	= 200	Shaft thread	= TR20x4
l2	= 2xl1+309		
l3	= 120		
l4	= 18		
m1	= 42		

Product drawings and brochures of any kind may contain errors for which Brd. Klee A/S cannot be liable.